FITTING	DESCRIPTION		GAUGE LENGTH
A	1/2" NPT FUEL SUPPLY	22-5/8" LONG	20" LONG
B	1/2" NPT FUEL RETURN	22-5/8" LONG	EMPTY WEIGHT
C	2" NPT LOW FUEL SWITCH		2500 LBS.
D	2" NPT MECHANICAL GAUGE		
E	1-1/4" NPT NORMAL VENT		
F	3" NPT EMERGENCY VENT		
G	1/2" NPT BASIN ALARM AND DRAIN		
H	2" NPT LOCKABLE FUEL FILL		

MODEL/GAL	CUSTOMER	WO#
160093 / 250	AMERICAS GEN	N/A

APPROVAL CHECKLIST	
REVIEWED BY	DATE
	APPROVED AS NOTED
	NO EXCEPTIONS TAKEN / RELEASE FOR PRODUCTION
	NOT APPROVED / REVISE AND SUBMIT
APPROVAL CHECKLIST MUST BE SIGNED PRIOR TO PRODUCTION	

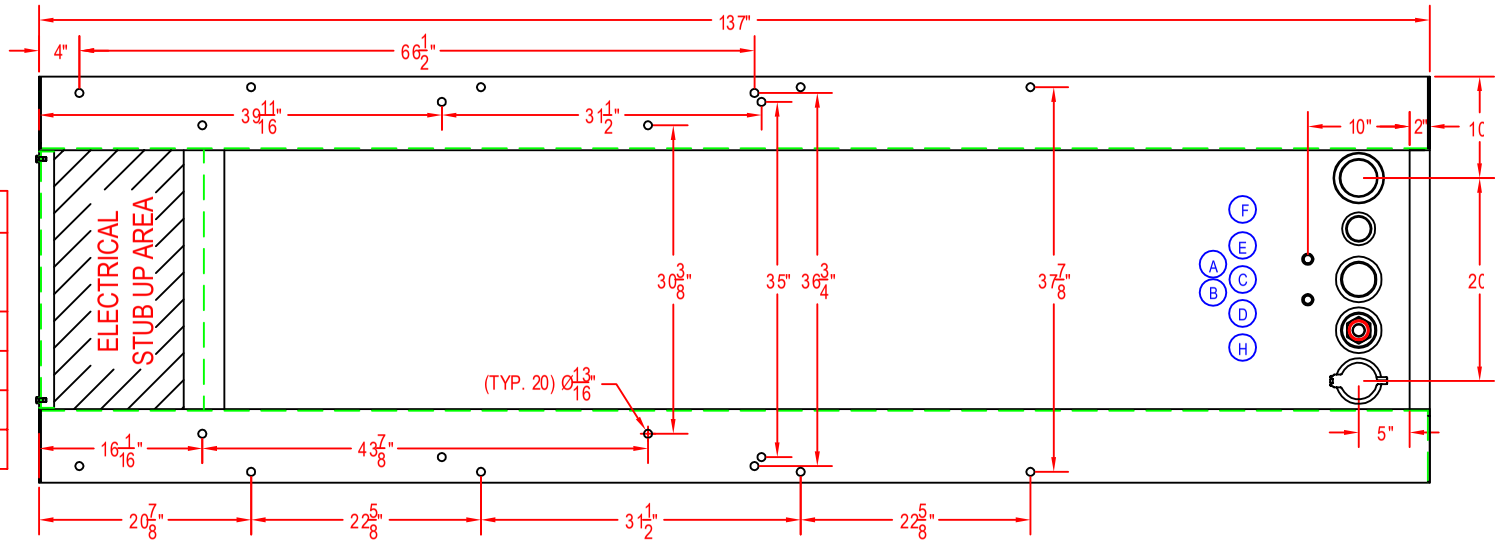

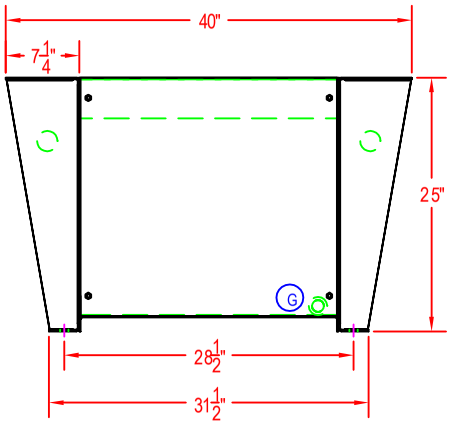

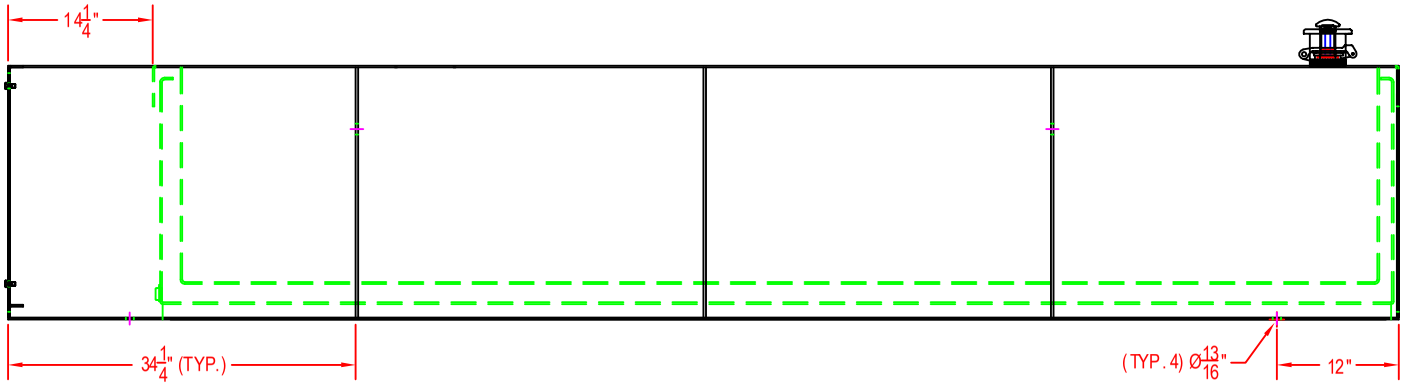

SPECIAL INSTRUCTIONS	
1	N/A

JOB NAME	FILE	DWG NO.	REV
160093	AM GEN	250 GALLON	

DRAWN BY	DATE	SCALE	SPEC	UNIT
B.K	10/06/04	N.T.S.	UL#142 DOUBLE WALL	M107, M128, ASM5, & ASM6