MODELS
CNE1600
CNY1500

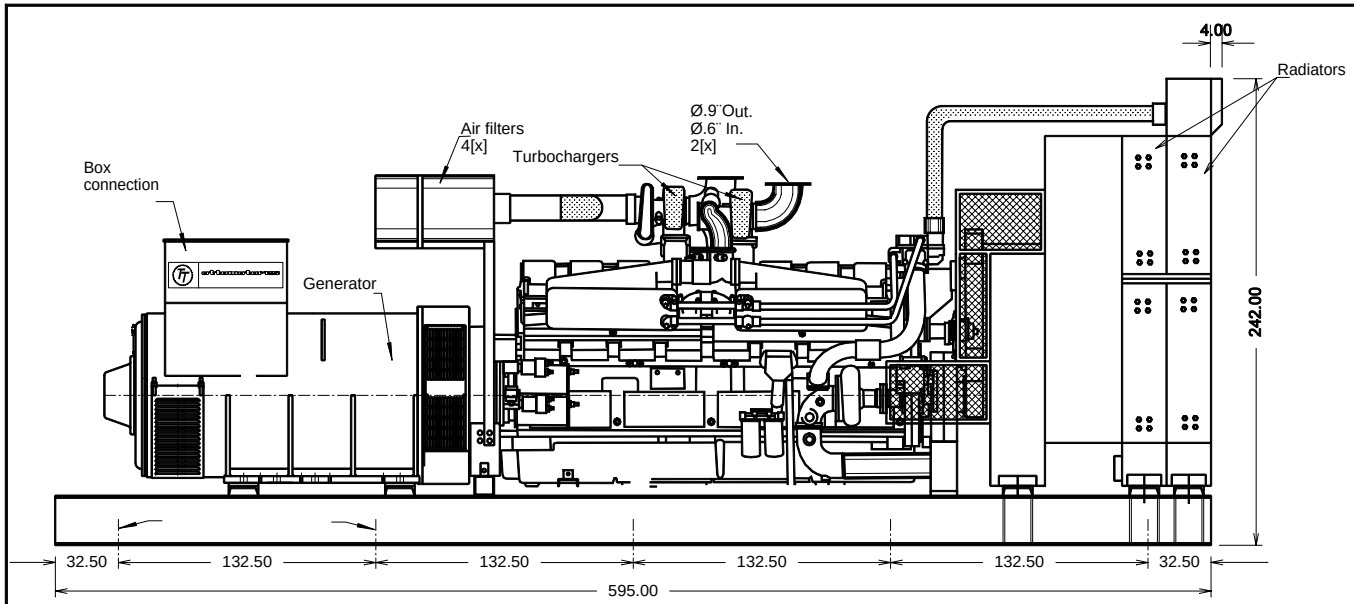

SIDE VIEW

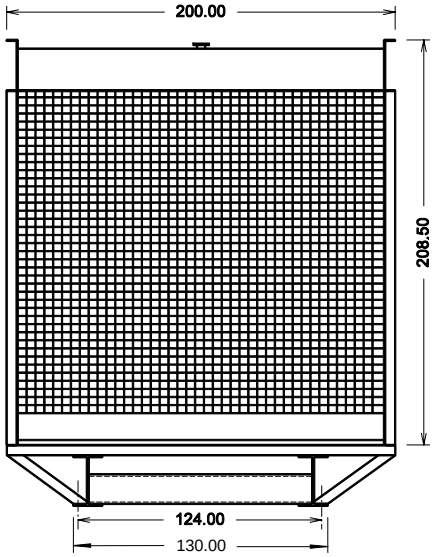

FRONT VIEW

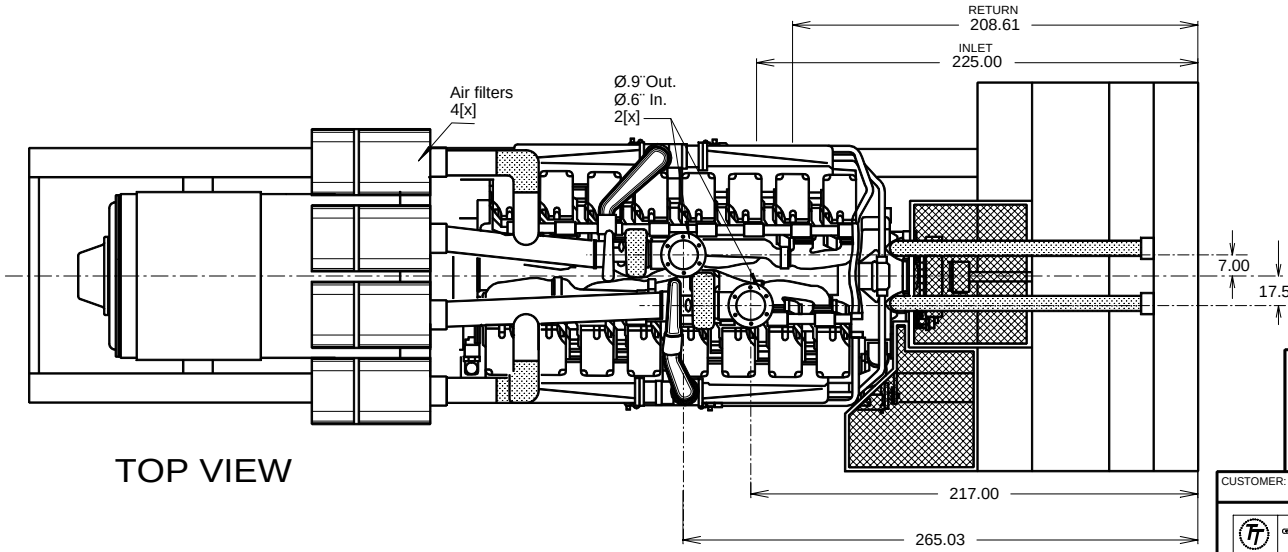

TOP VIEW

DESCRIPTION	
RADIATOR :	BEARWARD ENG LTD 56064/05
ENGINE:	KTA50 G3/G8/G9
AIR FILTER :	AH1135 4[X]
TOTAL WEIGHT :	9650 KGS.
# SPRINGS (AVMS) :	10. PZS.

Notes:

1.- The genset dimensions are the same by family model, there could be only differences on the alternator lenght see specific general arregement drawing of certein model.

2.- Ottomotores keeps the right to modify the information without prior notice.

ITEM	DESCRIPTION	CERTIFICATED	DATE
	REVIEWS		

CUSTOMER:

CALZ. SAN LORENZO No. 1150 COL. CERRO DE LA ESTRELLA
DEL. IZTAPALAPA C.P. 09860 TEL. CONM: 5624-56-00
FAX: 5426-55-21 / 5426-55-81
www.ottomotores.com.mx

DRAWINGS MADE IN MEXICO D.F.

DRAW:	ROGELIO GONZALEZ C.
DESIGN:	ROGELIO GONZALEZ C.
REVISED:	ING. FRANCISCO HARO M.
REVISED:	
CERTIFICATED:	ING. FRANCISCO HARO M.
MARKS:	CM
SCALE:	S/E
PURCHASE ORDER:	
DATE:	MAY 12 2004
CODE:	CNE/Y-17
DRW:	
OF:	

CUMMINS ENGINE KTA50G8/G9
NEWAGE ALTERNATOR